Maintaining Traffic on Roadways Requiring Excavation/Embankment

The NDDOT will maintain traffic at all times during a construction project. On projects that require part or all of the roadway to be excavated or embankment placed, traffic can be maintained by constructing half of the roadway at a time, installation of a temporary bypass, or the use of a detour route.

III-19A.01 One Lane Closure/Half at a Time

Construction of the roadway half at a time consists of closing one lane of traffic, and using half the roadbed at a time to maintain traffic. Typically, replacement of small to medium diameter centerline culverts in shallow to moderate depth, subcut, and other subgrade work will require construction half at a time. Deeper pipe or larger diameter pipe can be replaced half at a time by building a flare on each side of the pipe.

Design Requirements

- **Typical Section -** A 15 ft wide top of roadway should be maintained to allow for a 12 ft lane with 1.5 ft on each side for necessary traffic control devices. To achieve the required roadway width, temporary embankment and surfacing may be needed to widen half of the roadway. If site conditions are limited, a 14 ft minimum top width can be used.

  Ideally the work being done on half the roadway can be completed in one day. At the end of the day, the excavation can be backfilled, and a minimum 24 ft wide top of roadway with 4:1 foreslopes can be provided to maintain traffic overnight. If this cannot be accomplished, flagging will be required overnight, or until a full roadway section can be provided.

- **Profile –** A 7% maximum grade will be used for the temporary entrance and exit to the pipe removal area.

  Depending on pipe depth, roadway width and foreslopes, a substantial amount of pavement and sub-grade removal could be required to provide a 7% grade. The cost to replace a deep pipe half at a time may cost more than replacing the pipe utilizing a temporary bypass. An economic analysis should be conducted to determine if the additional removals and proposed pavement costs are greater than a bypass.

- **Work Zone Traffic Control –** Stackable vertical panels should be used on both sides of the maintained lane of traffic to delineate the path for drivers. Flaggers will be required on both ends to alternate traffic from each direction. A pilot car may be needed depending on the length of the closure and sight distance considerations.

If traffic is returned to head to head on a gravel surface at night, tubular markers should be used to mark the centerline of the roadway.

- **Plan Sheet Requirements**
  - **Detail or Plan Sheet** - A detail sheet and/or a plan note to explain the removal and replacement strategy. Necessary information shall include minimum roadway width, removal depth, max grade, max foreslope and traffic control strategy.
  - **Quantities –** All items that will be paid for separately at each pipe replacement location on the project including: pavement & base removal, temporary surfacing, work zone traffic control devices, etc.

Example – Shallow Pipe with Small Diameter

The process of replacing the pipe half at a time is specific to each location because site conditions create different design constraints. An example of the progression of removal and replacement of the pipe and pavement is shown below via typical sections.

This example is a relatively shallow 24" pipe, 5.5 ft from top of pavement, which could be replaced half at a time with minimal pavement removals. The roadway width is 30', 6" HBP over 12" of aggregate base with 4:1 existing foreslopes.

The first step is to switch traffic to one side using necessary traffic control devices and flaggers. A minimum 15' roadway width is required. The surfacing and base is removed to the top of the sub-grade on the right side. The pavement is removed an adequate distance perpendicular from the centerline of the pipe to ensure a 7% grade. In this example, 6" HBP plus 12" base equals 18" removal depth, which gives a removal length of 21.4' on each side perpendicular to the pipe.

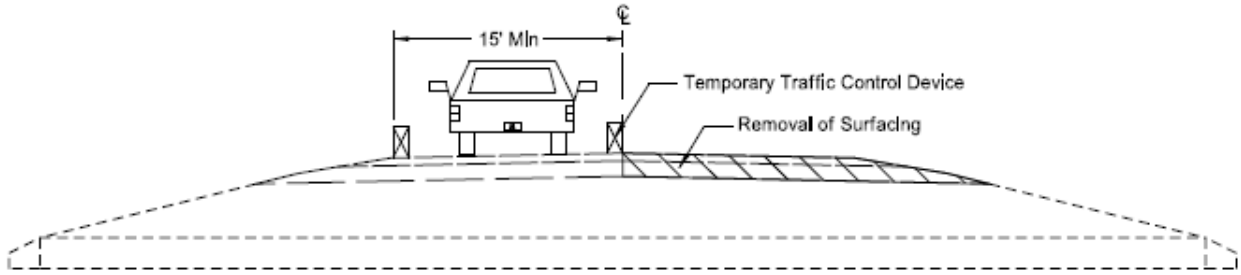

Figure III-19A-1

Next, traffic is switched to the right side where a minimum 15' roadway width is required. A 2:1 slope on the left side is desired with a 1:1 max slope. During this step, at least one half of the pipe should be removed. Excavation for the pipe trench should be conducted on the left side. The pavement on the left side should be removed to the extents matching the limits of the previous step.

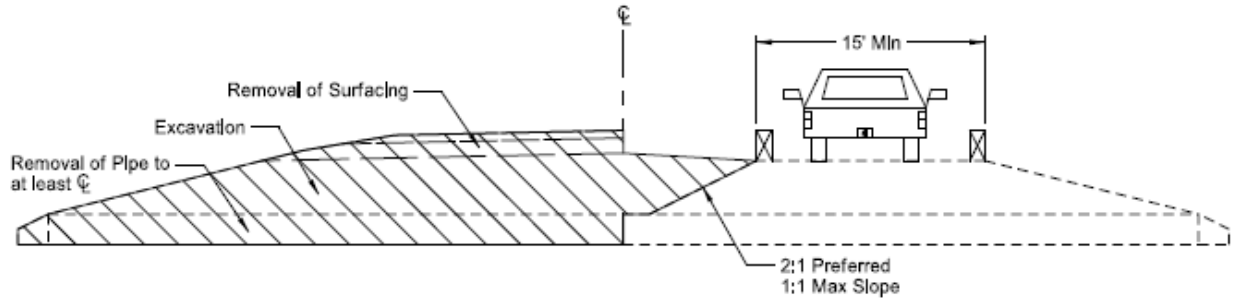

Figure III-19A-2

Then, traffic is switched back to the left side where one half of the new pipe has been placed and aggregate has been backfilled to the top of the subgrade if possible. The remaining quantity of pipe is removed and replaced. The other half of the trench is excavated and properly backfilled to the top of the subgrade.

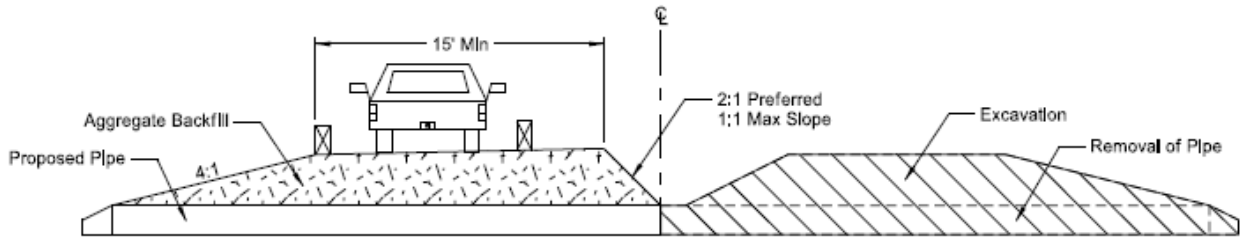

Figure III-19A-3

Once the subgrade is in place, the proposed aggregate base course and asphalt surfacing are placed. Each is done one half at a time to maintain the single lane of traffic.

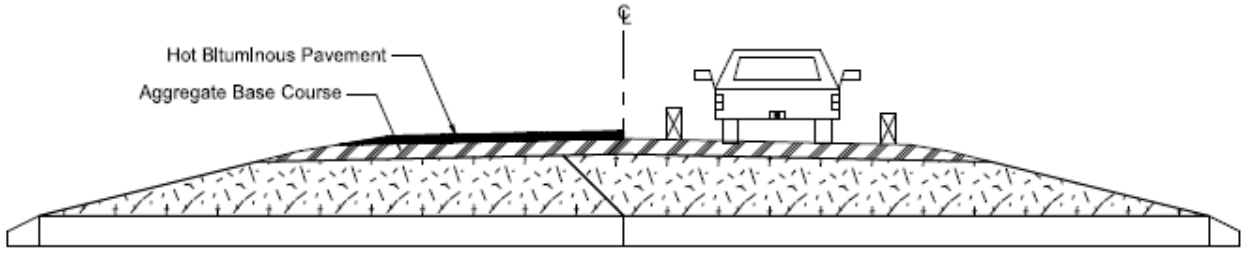

Figure III-19A-4

This strategy works well for shallow pipes. Previous economic analysis on NDDOT projects has shown that it is cost effective to use this strategy when the fill over the pipe is 6 feet or less. It may become more cost effective to provide a Type 2 temporary bypass when fill over the pipe is 8 feet or greater.

For large diameter or deep pipes it becomes evident that the half at a time strategy can be costly. In such a scenario, a wider and deeper initial removal would be required in Figure III-19A-3. The deeper the initial removal, the longer length of pavement removal to maintain a 7% max grade on

the roadway.

Referencing Figure III-19A-4, a large diameter or deep pipe will require the 15' traveled way to be pushed much further to the right. This would be necessary to maintain the 1:1 max slope from the surface of the temporary roadway to the bottom of the pipe trench. This could require additional embankment to construct a wide enough temporary roadway surface.

The above issues; pavement removal, proposed pavement, temporary surfacing, and embankment can increase the cost of the pipe replacement significantly. Decisions should be made on a case by case basis investigating economics and using engineering judgment.

III-19A.02 Temporary Bypass

Temporary bypasses are commonly used on two way roadways where a short section of the entire roadway width needs to be closed. Temporary bypasses are classified into three types. The type of bypass is related to the duration of the temporary bypass being in place.

Temporary Bypass – Type 1: Typically this type of bypass is used for replacing smaller diameter culverts such as 24" and 30" when the depth of the ditch is about four feet. The replacement of the culverts would normally be accomplished in one day. The temporary bypass is typically constructed by reshaping material that is in place and running traffic in the ditch bottom or sometimes on the backslope. When conditions permit, the Type 1 bypass may be used in lieu of replacing the pipe half at a time with one lane closure. This work is considered very short term and should last 1 day or less.

Temporary Bypass – Type 2: Typically this type of bypass is used for replacing larger diameter pipe, replacing deep pipe, or doing extensive subgrade work. This type of bypass is typically used when the backfill over the pipe is greater than six to eight feet. The work is considered short term and could take up to three days.

Temporary Bypass – Type 3: Typically this type of bypass is used for replacing structures such as bridges, box culverts, or structural plate pipe. The work is considered long term and could take more than three days.

Temporary bypasses should be used when engineering analysis of project cost and traffic control make it more practical than replacing pipe half at a time with one lane closure. Boring or jacking a pipe through the embankment is another alternative, but may be more costly. An engineering and economic analysis should be completed to verify the best practice.

Table III-19A-1

Temporary Bypass Design Guidelines						
Bypass Type	Minimum roadway Width	Aggregate Surfacing Thickness	Foreslope Rate	Minimum Radius	Max Grade	Traffic Control
Type 1 (1 day)	15’	0-2”	4:1	400’	7%	D-704-22M (daytime) D-704-15B (nighttime)
Type 2 (≤3 days)	28’	4”-6”	4:1	400’	7%	D-704-22M (daytime) D-704-15B (nighttime)
Type 3 (> 3 days)	28’	6”-8”	4:1	750’	7%	D-704-15B

Temporary Bypass – Type 1

The Temporary Bypass – Type 1 may be used when construction activities are expected to last up to one day. These activities may include the installation of centerline culverts, or other subgrade work. The design guidelines have been based on a 25 mph design speed. Very minimal earthwork is typically required to construct a Type 1 temporary bypass as traffic is typically run on the ditch bottom or sometimes on the backslope.

- **Width** – The minimum top width of the bypass should typically be 15 feet for one lane of traffic.

- **Surfacing** - The surfacing for the bypass will typically be dirt.

- **Foreslope** – A 4:1 foreslope should be used for the bypass. 3:1 slopes could be used if a clear recovery area is available at the bottom of the slope.

- **Horizontal Alignment –** Two elements were considered when determining the minimum radius of curvature for Type 1 bypasses. First, a minimum radius was determined from the Unpaved Roads Section of the *AASHTO Guidelines for Geometric Design of Very Low Volume Local Roads.* The method is the same as in *A Policy* for determining minimum curve radii, except a traction coefficient is used to account for the aggregate surfacing.

  Minimum Radius of Curvature for Temporary Bypass – Type 1

  Design speed: 25 mph
  Superelevation (e): -2.1 (normal crown)
  Traction Coefficient: 0.4
  Side Friction (f): 0.4 - 0.2 = 0.2

  $$R_{min} = \frac{V^2}{15(0.01e + f)} = 232.8 \text{ ft} \rightarrow 250 \text{ ft}$$

Secondly, required traveled way width was considered for sharp radii curves. A bypass with 250 ft radii, would need to be approximately 16 ft wide to accommodate a WB-50 vehicle. Based on this, a slightly larger minimum radius will allow a narrower bypass width. This was determined from required traveled way width on a curve from *A Policy.*

Minimum Traveled Way Width on a Curve

Design speed: 25 mph
Radius of Curvature: 400 ft
Number of Lanes (N): 1
Design Vehicle: WB-50
Track width of Design Vehicle (U): 10.2 ft
Lateral Clearance (C): 3 ft
Width of Front Overhang (F_A): 0.09
Extra Width Allowance (Z): 1.25 ft
$W_c = N(U+C)+(N-1)F_A+Z = 1(10.2+3)+(1-1)0.09+1.25 = 14.45$ ft → 15 ft

Based on these two elements, 400 ft was selected as the minimum radius for design of Type 1 bypasses. In cases where smaller radii are required, the travel way width may need to be increased.

- **Vertical Profile -** The maximum grade of Type 1 temporary bypasses shall be 7%. Crest and sag vertical curves shall follow *A Policy* for a 25 mph design speed.

- **Work Zone Traffic Control** – Work zone traffic control for a Temporary Bypass – Type 1 should be in accordance with Standard Drawing D-704-22 Layout Type M if operations will be during daylight hours only. If the bypass is in use overnight, traffic control should be in accordance with Standard Drawing D-704-15 Layout Type B and an advisory plate for 25 mph should be used.

- **Plan Sheet Requirements**
  - **Typical Section** – Roadway width, foreslope rate, etc.
  - **Horizontal Alignment** – Plan view layout, stationing, curve info, etc
  - **Pay Items** – Estimated quantities that are paid for separately such as, temporary bypass, erosion control items, work zone traffic control items, removal of bypass, etc.
  - **Non-Pay Items –** Estimated quantities that are not paid for separately. The standard specifications call out temporary bypasses to be paid for by the each (EA).

If full survey is available in the area of the bypass, consideration should be given to including a profile and cross-sections.

Temporary Bypass – Type 2

Temporary Bypass – Type 2 may be used when construction activities are expected to last 3 days

or less. These activities may include the installation of centerline culverts, RR crossings, or other subgrade work. The design guidelines have been based on a 25 mph design speed.

- **Width** – The minimum top width of the bypass should be 28 feet. This is based on two - 12 foot driving lanes with additional widening through the curves for two WB-50 design vehicles to meet on the bypass and have adequate room to pass. In areas of high truck traffic and oversized loads, additional width may be considered.

- **Surfacing** - The surfacing for the bypass will generally be aggregate. The minimum depth of aggregate surfacing shall be 4 inches. When truck traffic on the original roadway equals 10% or more of the original ADT, the thickness may be increased to 6 inches. Engineering judgment may be used to add additional depth.

- **Foreslope** – A 4:1 foreslope should be used for the bypass. 3:1 slopes could be used if a clear recovery area is available at the bottom of the slope.

- **Horizontal Alignment –** Two elements were considered when determining the minimum radius of curvature for Type 2 bypasses. First, a minimum radius was determined from the Unpaved Roads Section of the *AASHTO Guidelines for Geometric Design of Very Low Volume Local Roads.* The method is the same as in *A Policy* for determining minimum curve radii, except a traction coefficient is used to account for the aggregate surfacing.

  Minimum Radius of Curvature for Temporary Bypass – Type 2

  Design speed: 25 mph
  Superelevation (e): -2.1 (normal crown)
  Traction Coefficient: 0.4
  Side Friction (f): 0.4 - 0.2 = 0.2

  $$R_{min} = \frac{V^2}{15(0.01e + f)} = 232.8 \text{ ft} \rightarrow 250 \text{ ft}$$

  Secondly, required traveled way width was considered for sharp radii curves and the ability for vehicles to navigate and meet each other on such a bypass. A bypass with 250 ft radii, would need to be approximately 31 ft wide to allow two WB-50 vehicles to pass each other. Based on this, a slightly larger minimum radius will allow a narrower bypass width. This was determined from required traveled way width on a curve from *A Policy.*

  Minimum Traveled Way Width on a Curve

  Design speed: 25 mph
  Radius of Curvature: 400 ft

Number of Lanes (N): 2
Design Vehicle: WB-50
Track width of Design Vehicle (U): 10.2 ft
Lateral Clearance (C): 3 ft
Width of Front Overhang (F_A): 0.09
Extra Width Allowance (Z): 1.25 ft

$W_c = N(U+C)+(N-1)F_A+Z = 2(10.2+3)+(2-1)0.09+1.25 = 27.74$ ft → 28 ft

Based on these two elements, 400 ft was selected as the minimum radius for design of Type 2 bypasses. In cases where smaller radii are required, the travel way width may need to be increased.

- **Vertical Profile -** The maximum grade of Type 2 temporary bypasses shall be 7%. Crest and sag vertical curves shall follow *A Policy* for a 25 mph design speed.

- **Work Zone Traffic Control** – Work zone traffic control for Type 2 temporary bypass should be in accordance with Standard Drawing D-704-22 Layout Type M if operations will be during daylight hours only. If the bypass is in use overnight, traffic control should be in accordance with Standard Drawing D-704-15 Layout Type B and an advisory plate for 25 mph should be used.

- **Plan Sheet Requirements**
  - **Typical Section** – Roadway width, foreslope rate, surfacing thickness, etc.
  - **Horizontal Alignment** – Plan view layout, stationing, curve info, etc
  - **Pay Items** – Estimated quantities that are paid for separately such as, temporary bypass, erosion control items, work zone traffic control items, removal of bypass, etc.
  - **Non-Pay Items –** Estimated quantities that are not paid for separately. The standard specifications call out temporary bypasses to be paid for by the each (EA). An estimate of the material needed to construct the bypass should be given, such as embankment, topsoil, water, aggregate surfacing, etc to aid the contractor in preparing a bid for the bypass.

If full survey is available in the area of the bypass, consideration should be given to including a profile and cross-sections.

<u>Temporary Bypass – Type 3</u>

Type 3 Temporary Bypass shall be used when construction activities are expected to last longer than 3 days. These activities may include the installation of box culverts, large diameter or deep centerline culverts or other subgrade work. The design guidelines have been based on a 45 mph

design speed which is desirable.

- **Width** – The minimum top width of the bypass should be 28 feet. This is based on two - 12 foot driving lanes with additional widening through the curves for two WB-65 design vehicles to meet on the bypass and have adequate room to pass. This was determined from required traveled way width on curve from *A Policy.*

  Minimum Traveled Way Width on a Curve

  Design speed: 45 mph
  Radius of Curvature: 750 ft
  Number of Lanes (N): 2
  Design Vehicle: WB-65
  Track width of Design Vehicle (U): 10 ft
  Lateral Clearance (C): 3 ft
  Width of Front Overhang (F_A): 0.1
  Extra Width Allowance (Z): 1.64 ft

  $W_c = N(U+C)+(N-1)F_A+Z = 2(10+3)+(2-1)0.1+1.64 = 27.74 \text{ ft} \rightarrow 28 \text{ ft}$

  In areas of high truck traffic and oversized loads, additional width may be warranted.

- **Surfacing** - The surfacing for the bypass will generally be aggregate. The minimum depth of aggregate surfacing shall be 6 inches. When truck traffic on the original roadway equals 10% or more of the original ADT, the thickness can be increased to 8 inches. Engineering judgment may be used to add additional depth. If a bypass is intended for large amounts of traffic for extended periods of time, contact Materials & Research for a pavement design.

- **Foreslope** – A 4:1 foreslope should be used for the bypass. 3:1 slopes could be used if a clear recovery area is available at the bottom of the slope.

- **Horizontal Alignment –** The minimum radius of curvature for bypasses has been determined from the Unpaved Roads Section of the *AASHTO Guidelines for Geometric Design of Very Low Volume Local Roads.* The method is the same as in *A Policy* for determining minimum curve radii, except a traction coefficient is used to account for the aggregate surfacing.

  Minimum Radius of Curvature for Temporary Bypass – Type 3

  Design speed: 45 mph
  Superelevation (e): -2.1 (normal crown)
  Traction Coefficient: 0.4

Side Friction (f): 0.4 - 0.2 = 0.2

$$R_{min} = \frac{V^2}{15(0.01e + f)} = 754.2 \text{ ft} \rightarrow \text{Use a design value of 750 ft}$$

A 2.1% max superelevation can be incorporated into bypass curves if desired by the designer. Superelevation and runout and runoff should be computed in accordance with *A Policy.*

- **Vertical Profile -** The maximum grade of Type 3 temporary bypasses shall be 7%. Crest and sag vertical curves shall follow *A Policy* for a 45 mph design speed.

- **Work Zone Traffic Control** – Work zone traffic control for Type 3 temporary bypasses should be in accordance with Standard Drawing D-704-15 Layout Type B.

- **Plan Sheet Requirements**
  - **Typical Section** – Roadway width, foreslope rate, surfacing thickness, etc.
  - **Horizontal Alignment** – Plan view layout, stationing, curve info, etc
  - **Profile** – grades, vertical curve info, etc.
  - **Cross-sections** – if full survey is available, cross section should be provided.
  - **Pay Items** – Estimated quantities that are paid for separately such as, temporary bypass, erosion control items, work zone traffic control items, removal of bypass, etc.
  - **Non-Pay Items –** Estimated quantities that are not paid for separately. The standard specifications call out bypasses to be paid for by the each (EA). An estimate of the material needed to construct the bypass should be given, such as embankment, topsoil, water, aggregate surfacing, etc to aid the contractor in preparing a bid for the bypass.

<u>Offset from Work Zone</u>

There needs to be enough space between the roadway and the bypass for work to be done in the construction zone. For example, a project replacing a box culvert needs 12'-18' for the wings of the culvert, 20' for riprap, foreslope distances for both the roadway and the bypass, and additional space for standard construction movement. The engineer shall determine the appropriate offset distance considering all necessary design variables including but not limited to cost and right of way. Figure III-19.07 shows a potential scenario.

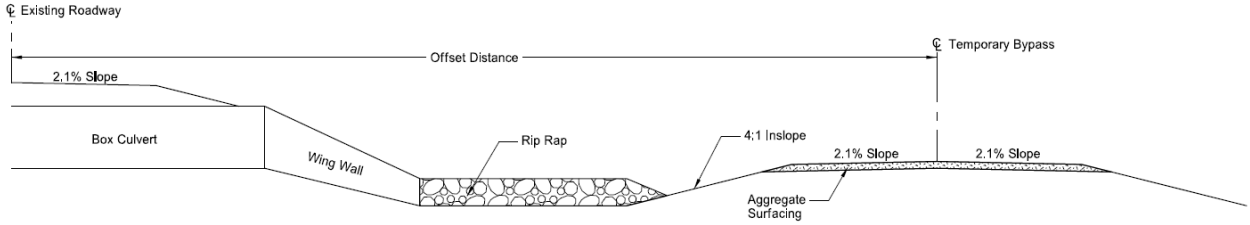

Figure III-19A-5 Proposed Cross Section Example

III-19A.03 Detour Routes

Detour routes involve closing the roadway completely and signing an alternate route for traffic. Detours should only be used if it is the only feasible alternative, or other methods are prohibited by cost. Closure of a roadway and use of a detour route will require approval by the Deputy Director for Engineering.

- **Traffic Control -** Long distance rural detour routes shall be signed in accordance with Standard Drawing D-704-21 Layout Type I.

  Shorter distance urban detour routes shall be signed in accordance with Standard Drawing D-704-23 Layout Type Q.

- **Plan Sheet Requirements**
  - **Detour Route Layout**
  - **Quantities**